Place sample in centre of sphere!

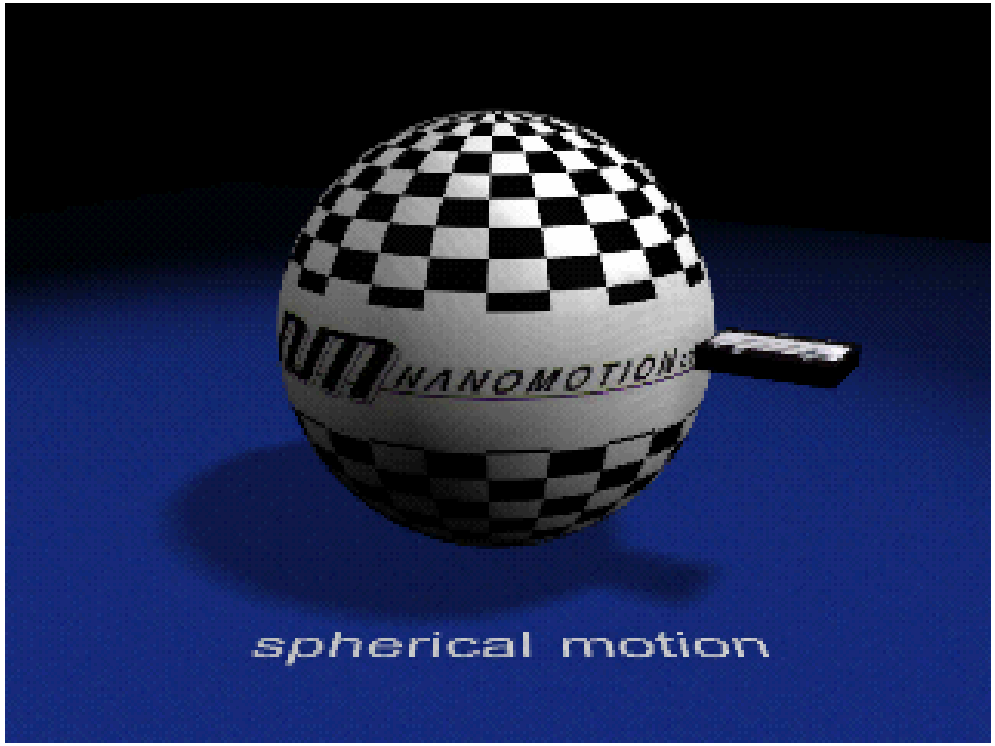

Motion Control Systems for Target Station 2

Dennis Cowdery

An overview of TS2 and its timescales.

- The ISIS facility will be enlarged with the construction of Target Station 2.
- There will be 7 “day 1” instruments.
- Day 1 is in October 2008.
- It is estimated that there will be 700 motion axes.
- We need to rationalise our purchasing.
- Purchasing based on technical merit and in house experience.

- See http://ts-2.isis.rl.ac.uk/instruments/phase1/ for full information.

Requirements for TS2 control systems.

- **MOTION** - To be able to move and accurately position instrument items. This will often be in hostile environments.
- **VERSATILITY** – Able to control motors of many types.

  This includes hybrid steppers, DC permanent magnet servos, brushless servos and piezo ceramic.
- **SCALE** - To handle loads from grams to tons.

  This requires the size range of motors to be large, with implications for drive amplifiers.
- **CONTROL** - To be able to communicate with other control systems and computers in a meaningful way. To achieve synchronised motion over hundreds of axes.

A Refresher Course!

Each motion axis requires -

- A mechanical mount or ‘stage.’
- A form of motor.
- A form of positional feedback.
- Limit switches.
- A datum point switch.
- A motion controller.

Refresher Course – Some stage types

- Linear stages

  These form basic building blocks.

- Rotary and arc.

  Used in goniometer systems

- Hexapod

  – a clever compound stage giving 6 degrees of freedom.

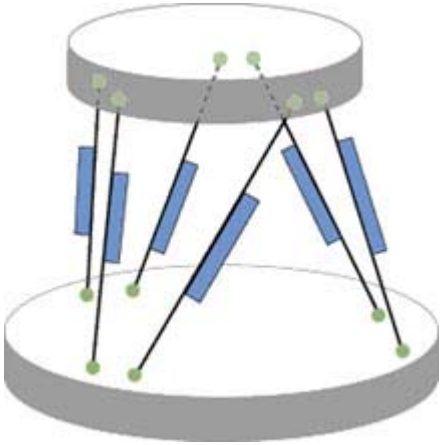

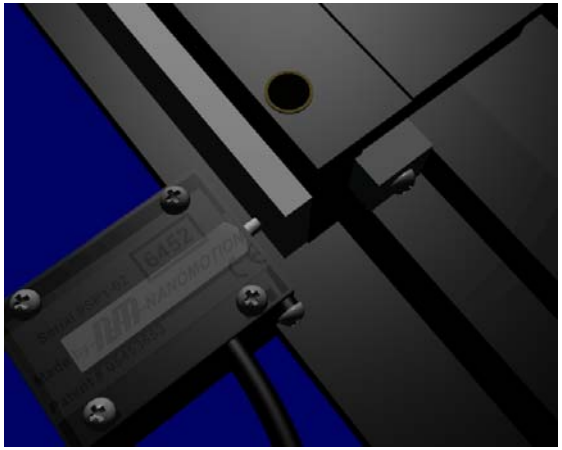

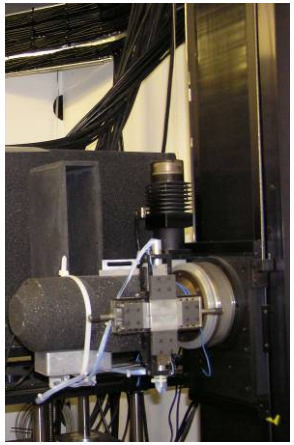

Refresher Course - Motor types

- Stepper (reluctance, permanent magnet, hybrid.)
- Servo (AC, DC, brushless).
- Piezo (slip/stick, inchworm, caterpillar, squiggle.)

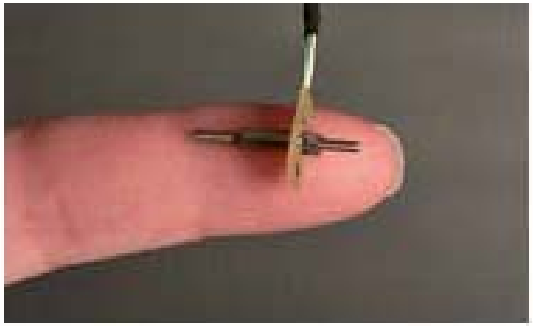

Refresher Course - Motor types

- Hybrid - 200 steps/rev.

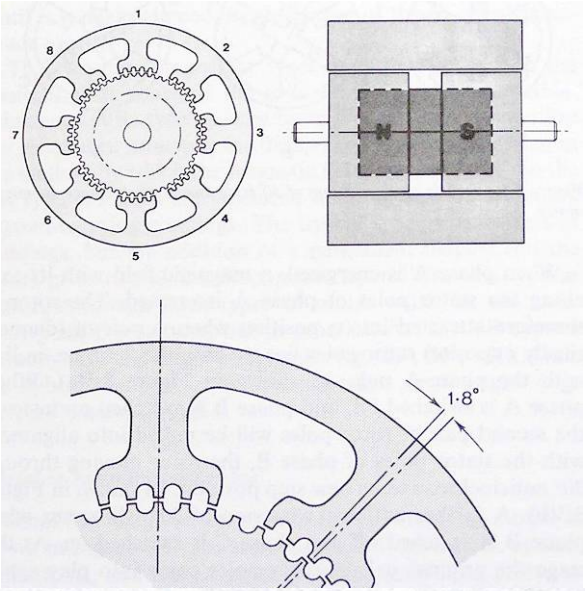

- Variable reluctance - 12 steps rev.

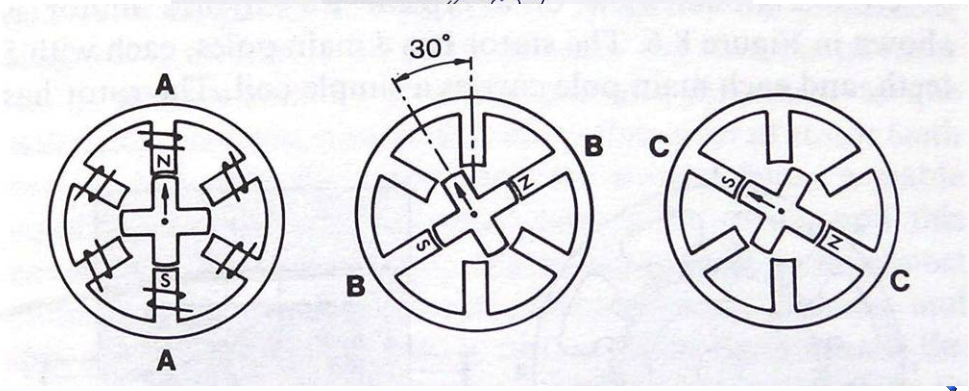

Refresher Course - Position feedback

- incremental
- absolute binary
- absolute Gray
- potentiometer
- linear variable displacement transformer (LVDT)
- capacitive

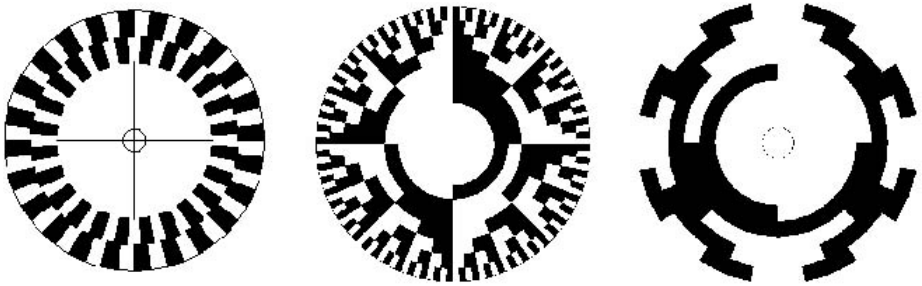

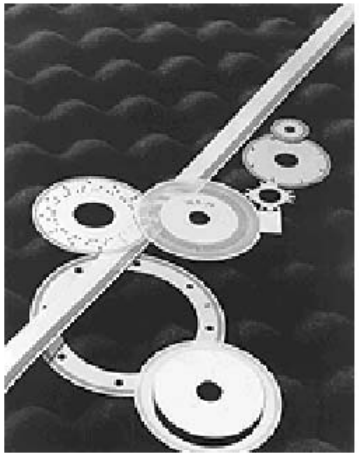

Refresher Course - Controllers

- The controller is an electronic box that calculates a motion profile. When supplied with parameters for speed, distance (& others), it will generate a string of step pulses which subsequently cause the motor to step or rotate.
- It reads encoder values and uses these to either correct the motion profile ‘on the fly’, or make final corrections at the end of the move.
- It may be capable of operating several axes from the same box.
- It may be capable of contouring between two or more axes (machining a circle).
- It may be able to store programmed motion profiles in its own memory.
- It must be able to communicate with the outside world.

Refresher Course

- THE END

Co-working teams

- Scientist – customer

  Project Manager
- Mechanical designers
- Computer group
- Sample environment team
- Controls team
- Electrical design team
- Health and safety group
- Health Physics

Specification – some issues

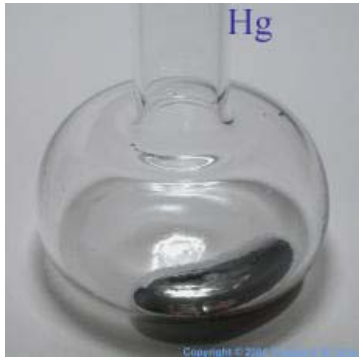

Specification – Controller

- The control system must have separate motion controller and amplifiers.
- The motion controller and encoders must be battery backed.
- The controllers must have real time synchronisation facilities.
- The controllers must be independent of system software.
- Controllers must have simple diagnostic facilities, independent of platform and specialist software.

Specification – Amplifiers & Drivers

- Amplifiers shall be grouped together in a naturally ventilated rack.
- Amplifier types shall be available for stepper, dc servo and piezo ceramic motors as standard.
- The amplifiers shall each have an associated diagnostic card.
- A jog box shall be provided to allow the movement of motors even in the complete absence of the controller
- Amplifier types shall be interchangeable in the amplifier rack.
- Stepper amps shall have switchable current and microstep ratios.

Specification – The decisions

- Controller to be Galil DMC 2280
  - 8 axis, analog and digital I/O, Ethernet, RS232 & USB comms.
- Stepper motor amplifier to be SmartDrive DM75
  - 0.5 to 8 amps/phase, 2-256 microstep ratios.
- Piezo Ceramic amplifiers to be NanoMotion.
- DC servo amplifiers to be Advanced Motion Controls
- Diagnostic cards and jog box system of ISIS design
- Power supply selection from 25, 50 or 72 Vdc.
- All cabinet and crate wiring to be front access only.

Ideas to Invoicing – A trial on CRISP.

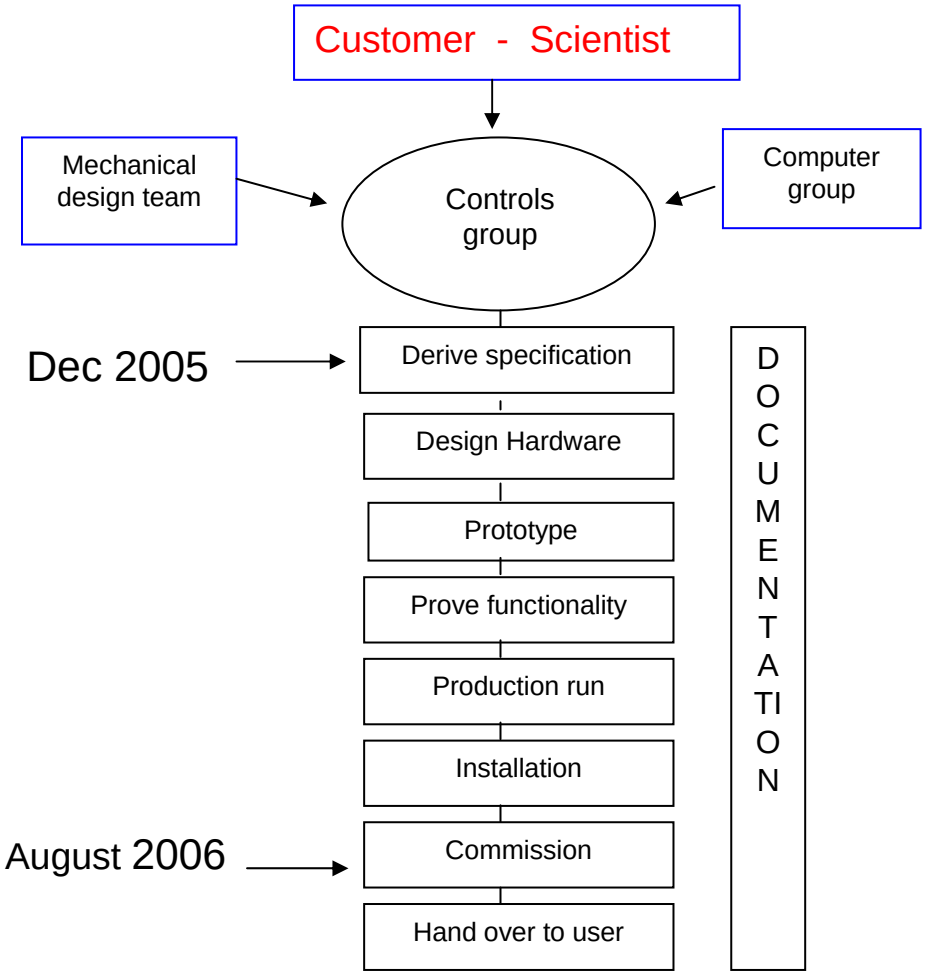

Stages of development

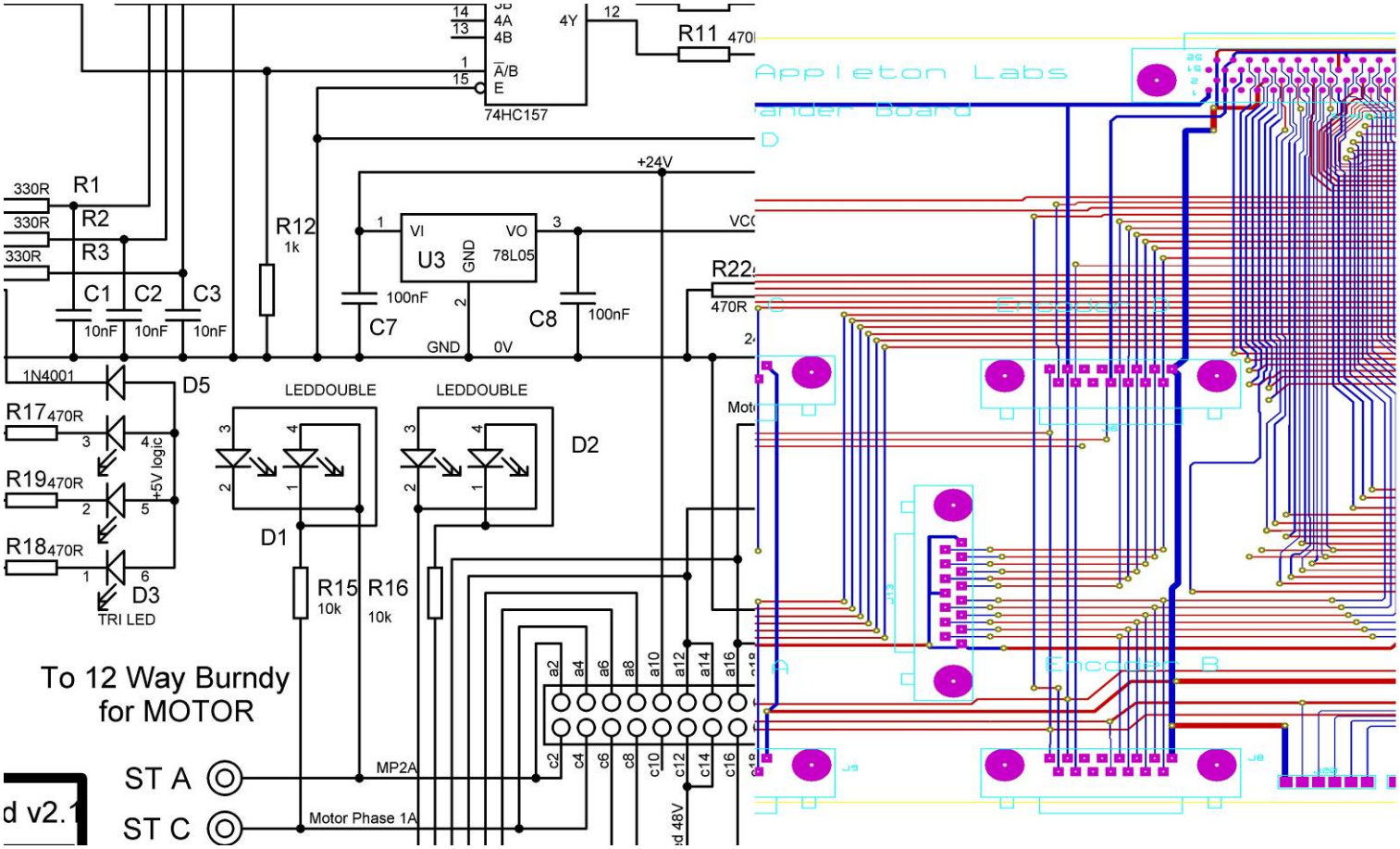

GALIL

MOTOR
LIMITS
high performance stepper drive
ISIS
Stepper Diagnostic Card
DM75
DM110

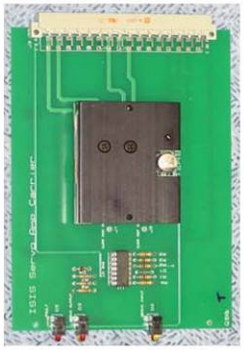

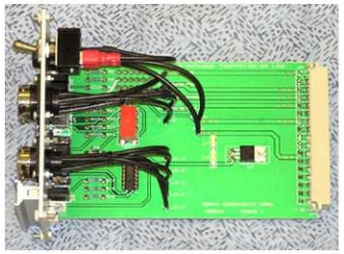

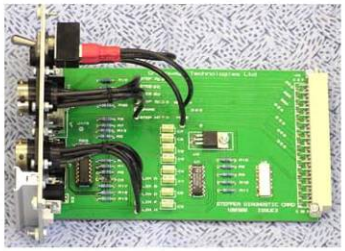

The ISIS Standard Motor Crate

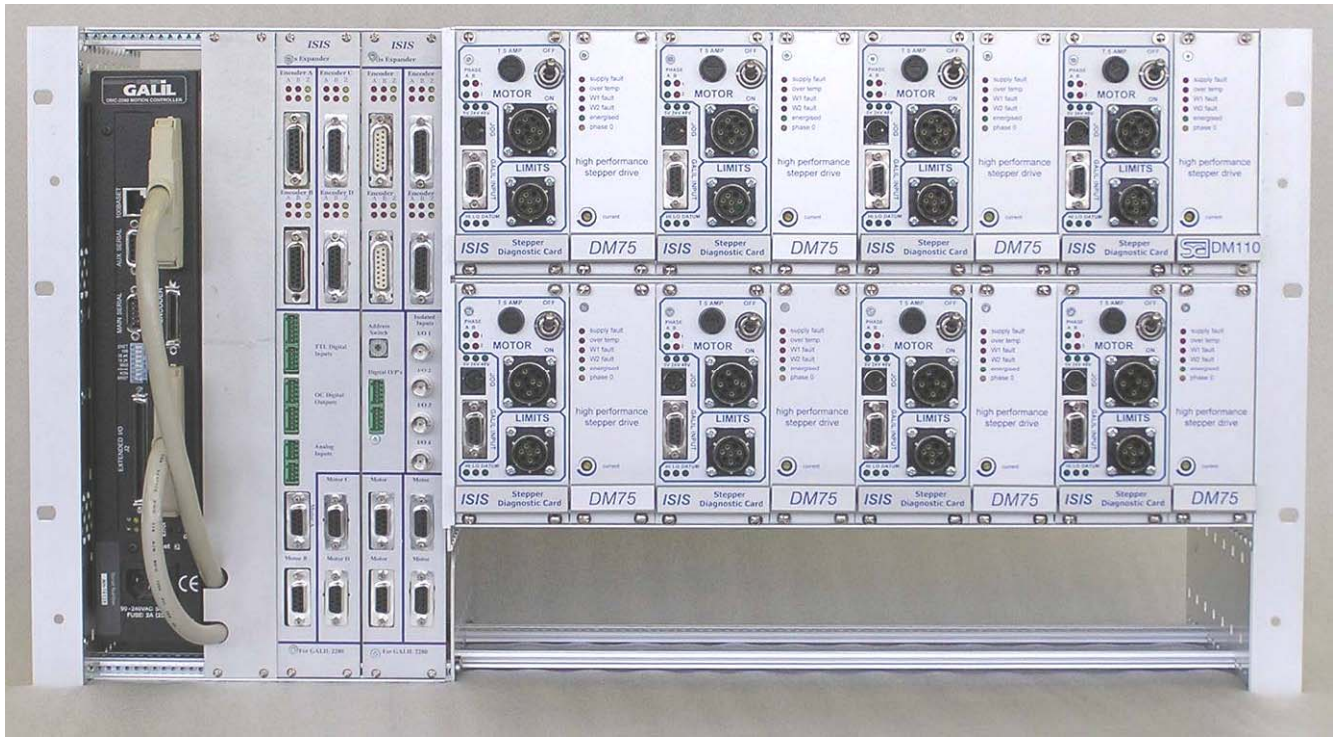

- Dennis Cowdery, Richard Blight, Steve Cox & many others.