Australian Government

bragg institute
ansto in partnership

Australian Nuclear Science & Technology Organisation

Sample Environments at the OPAL Neutron Beam Facility, Sydney, Australia.

Scott Olsen. sol@ansto.gov.au

Fourth International Workshop on Sample Environments in Neutron Scattering Facilities, Argonne National Laboratory, Argonne, IL, USA September 6-8 2006.

Australian Government

ansto

Summary of talk

- Overview of the new OPAL reactor.
- Overview of the Neutron Beam Facility.
- Summary of the initial suite of instruments and sample environments.
- Discussion of some particular sample environments.
- Plans over the next 6-12 months.

OPAL: the new Australian Neutron Source

OPAL Reactor Major milestones

- **Federal Government approves construction ...August 1997**
- Define scientific capabilities ……April 1998
- Sign construction contract with INVAP ……..July 2000
- Commence neutron beam instrument project ……..August 2000
- **Reactor project & Instrument project …….. 2000 -2006**
- **Reactor critical (3mW) ……..Aug. 2006**
- **Reactor full power (20MW) ……..Nov. 2006**
- **Operational ……Jan. 2007**

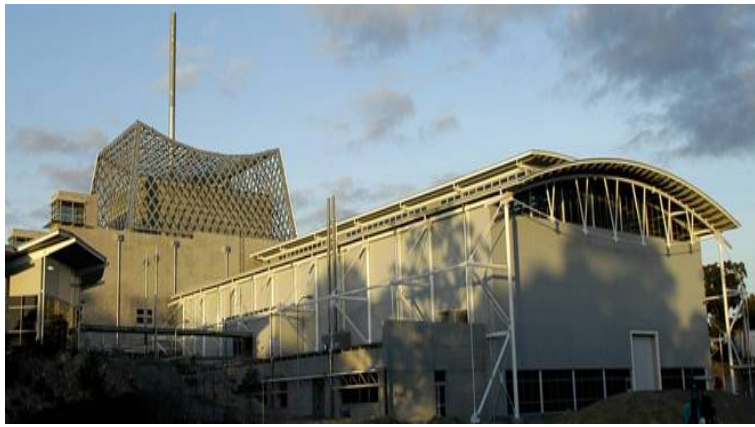

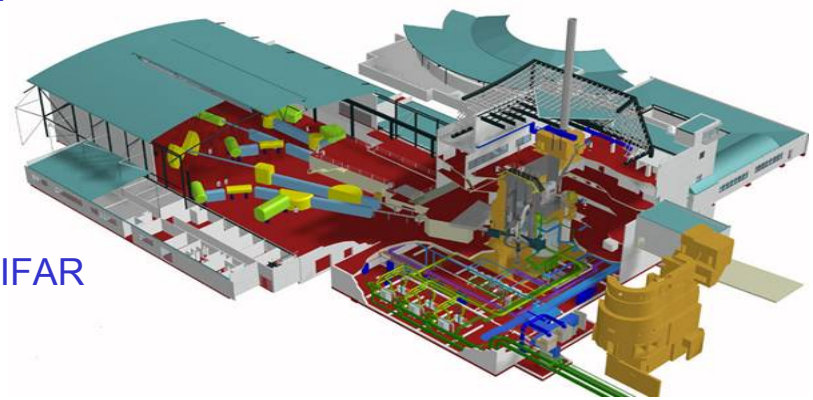

Performance

- Neutron scattering enhanced by ~10 - 1000 times relative to HIFAR
- Uses LEU (low-enriched uranium).
- Capital investment of > **$250M** (in 2005),
  - including ~$^1/_3$ specifically for neutron beam facilities
  - includes new laboratories & Bragg Institute offices
- Reactor power **20 $MW_{thermal}$**
- Unperturbed neutron flux **4 x 10^{14} n/cm^2/s**

The D_2 moderator

Volume:	20 litres
Temperature:	< 20 K
Heat load:	< 4.5 kW
T_{M-B}:	~ 40 K

ansto

Bragg Institute

Australian Government

ANSTO in Partnership

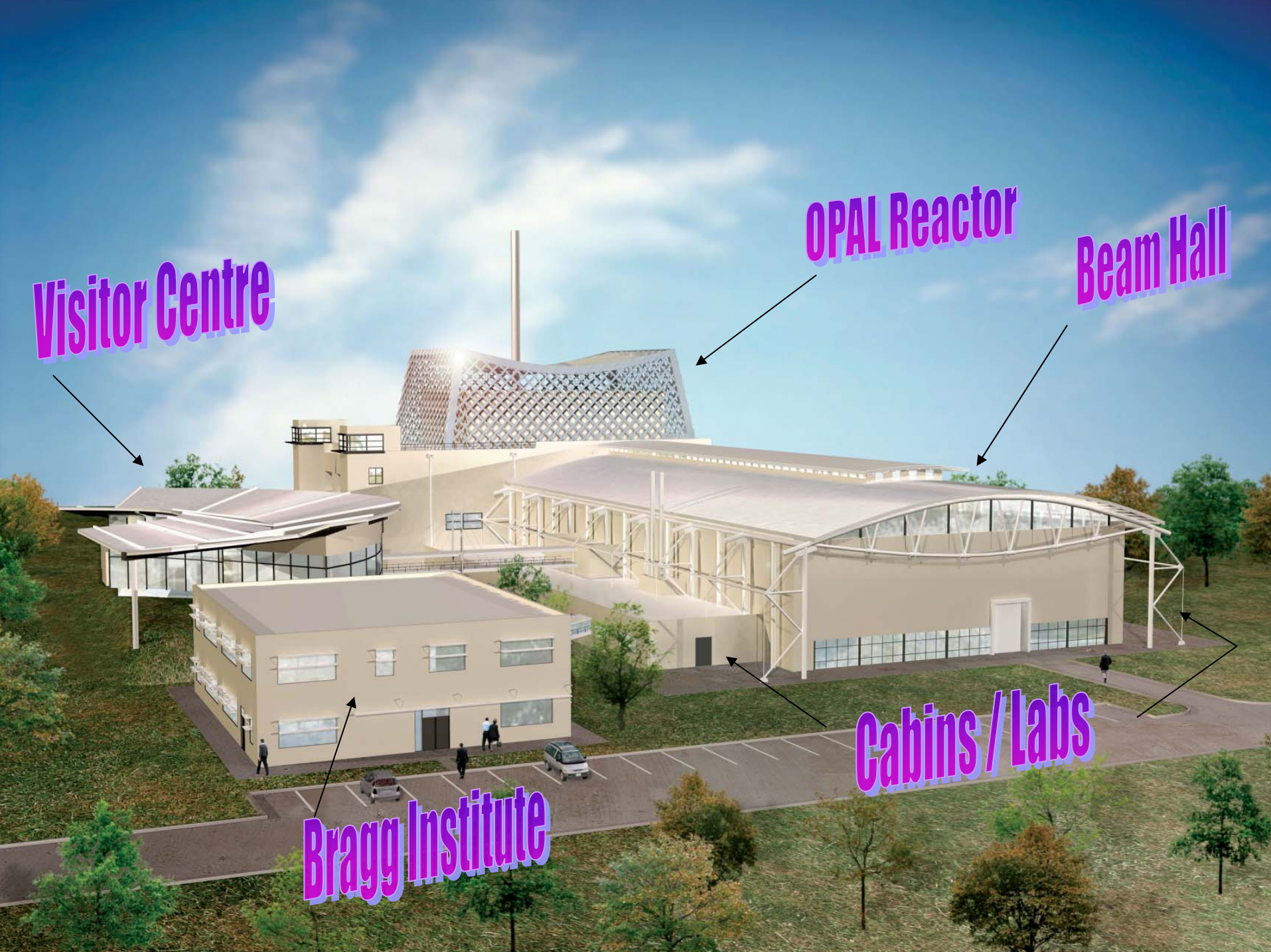
Visitor Centre
OPAL Reactor
Beam Hall
Cabins / Labs
Bragg Institute

View of Instruments in the Guide Hall

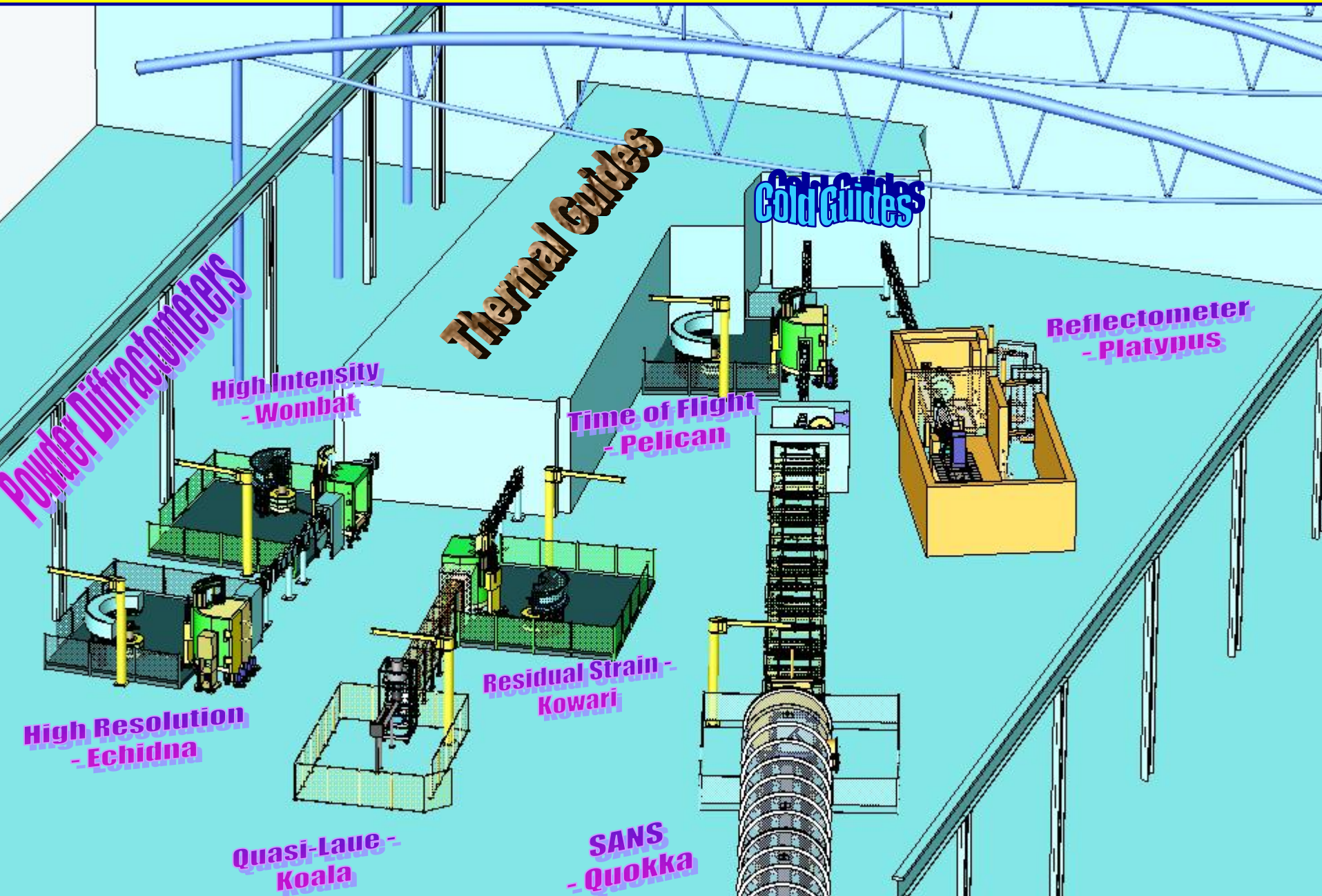

Neutron Guide Hall, Reactor and Offices at OPAL

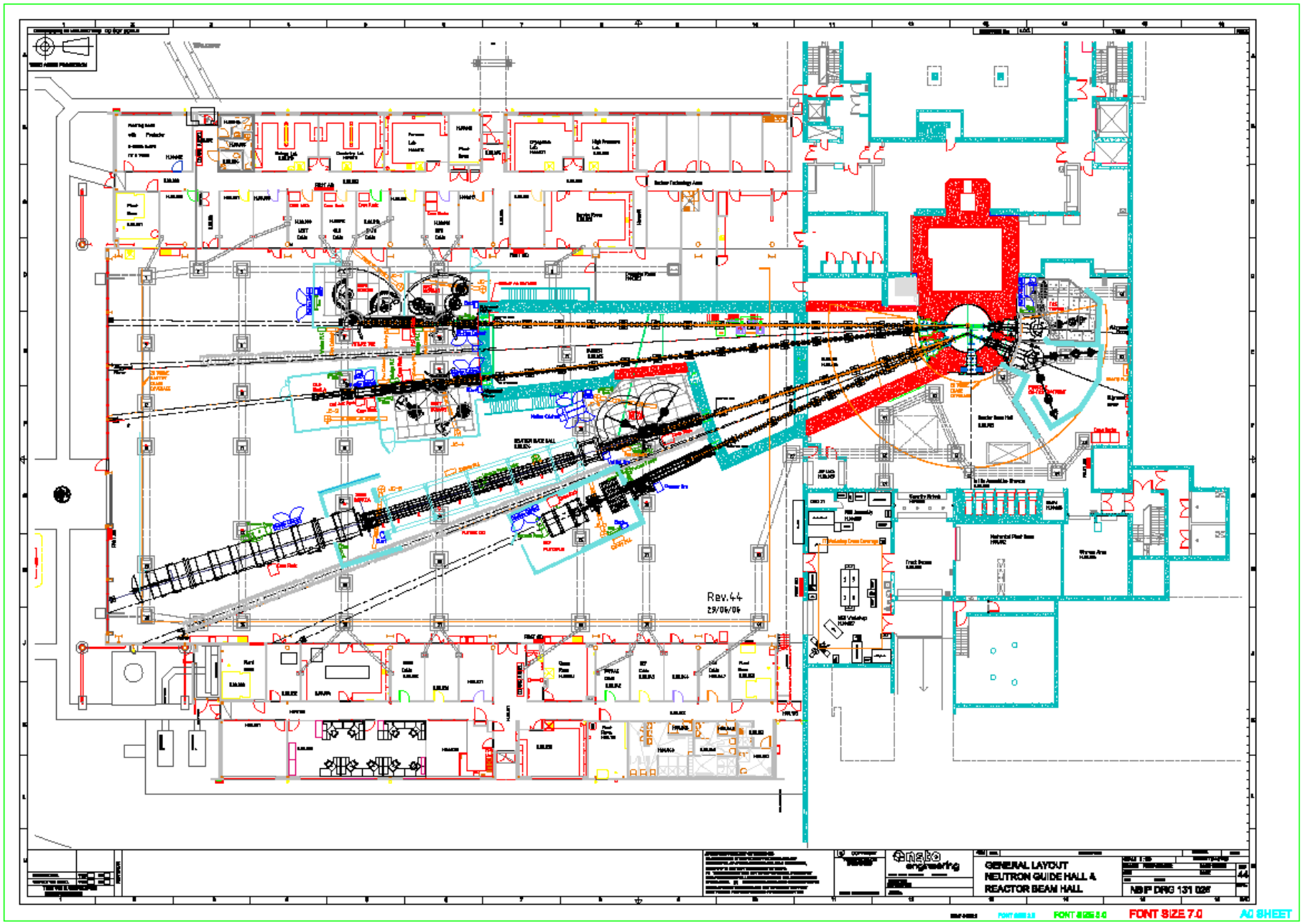

X-Ray Instruments

X-Ray Reflectometer (2004)

Panalytical X'Pert Pro instrument capable of measuring reflectivity at air-solid or air-liquid interfaces.

Small Angle X-ray Scattering (2005)

Sample environments are available for solids & liquids, including two temperature control units one for -30C to 120C and a 2nd for 20C to 300C.

Australian Government

ansto

Laboratories – Biology, Chemistry, Cryogenics, Furnace and High Pressure

Australian Government

ansto

Reflectometer – Control Cabin

Australian Government

ansto

Cold Neutrons: SANS (background) Reflectometer (foreground)

Thermal Neutrons: Powder Diffractometers
High-resolution (background)
High-intensity (foreground)

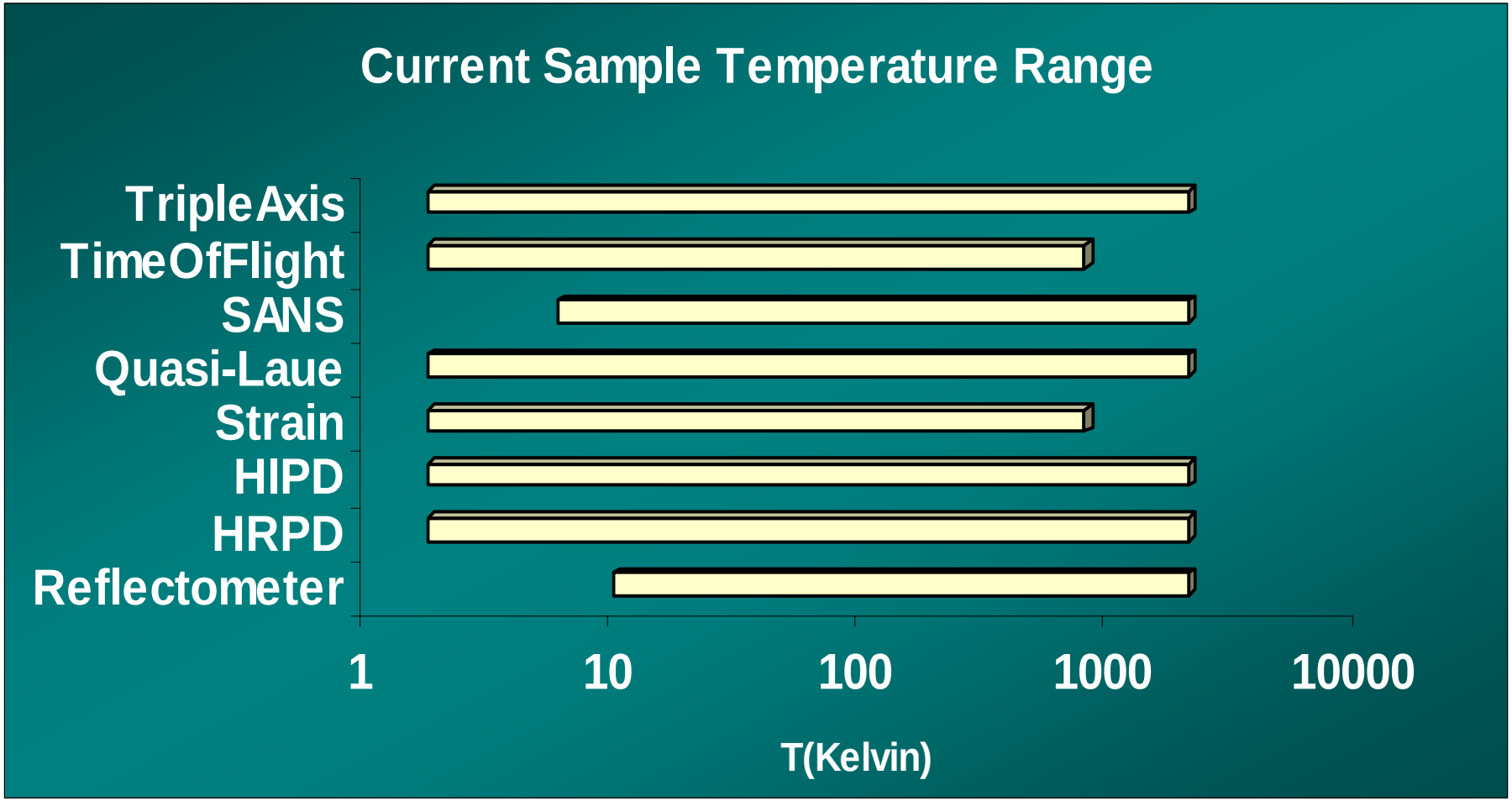

Subject to funding approval we will add.

- A furnace / load frame to the Strain Scanner to increase it's capability to 1900K.
- A 300mK ^{3}He one-shot refrigerator for all except SANS and reflectometer.

Australian Government

ansto

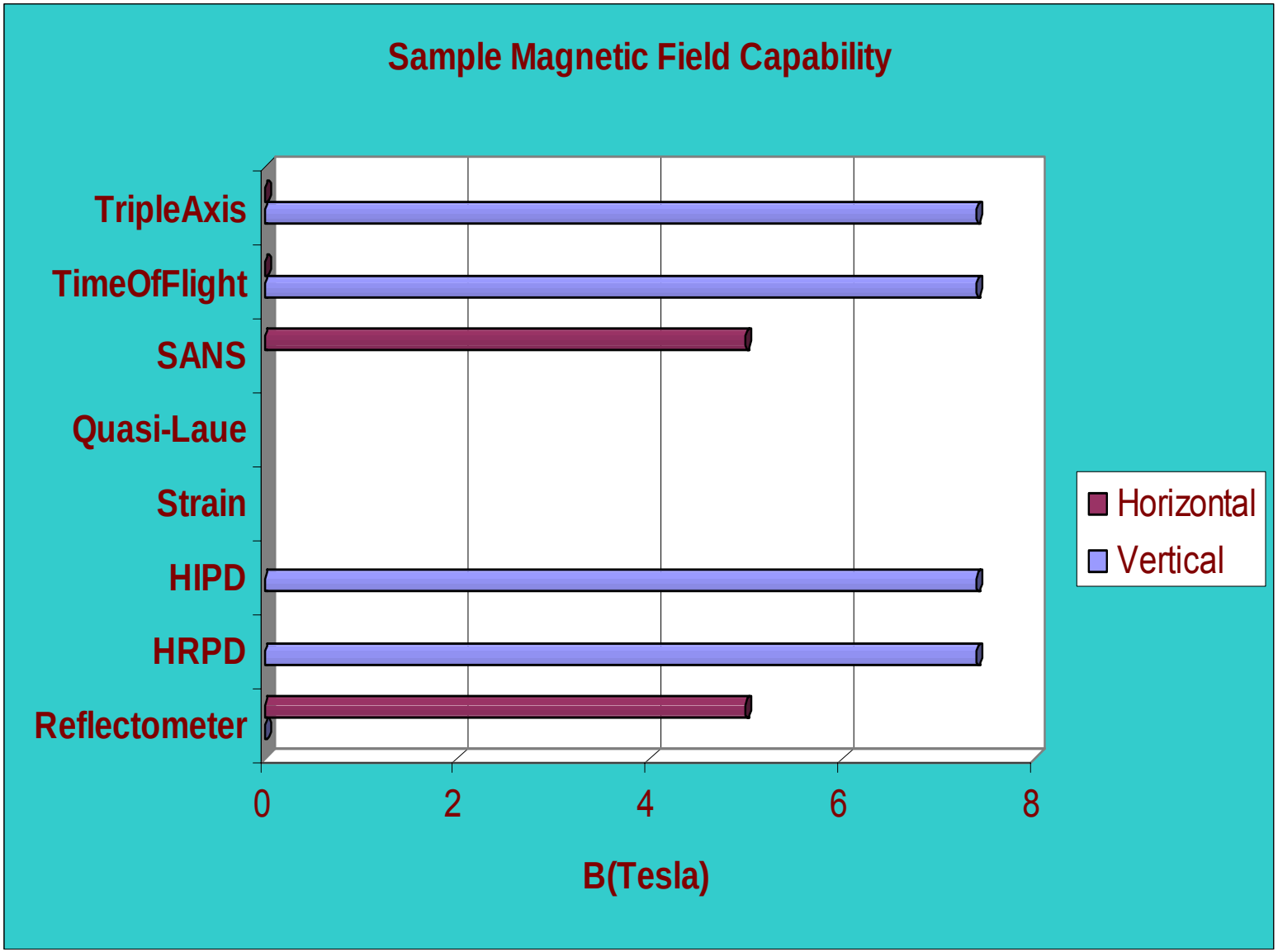

Australian Government

ansto

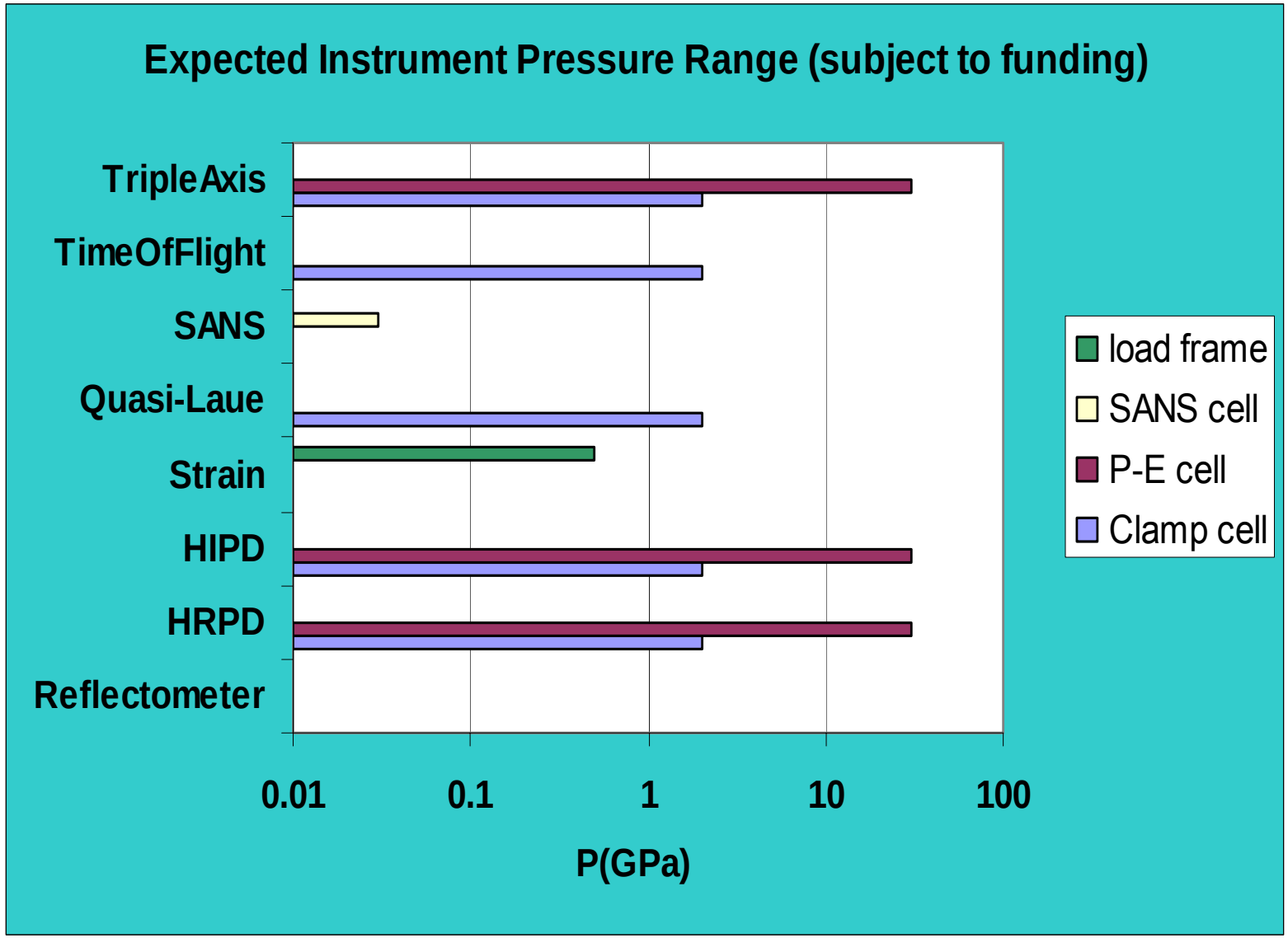

Data Acquisition and Instrument Control

- **GUI = GumTree** ANSTO sponsored open source project to develop a graphical user interface written in Java

http://gumtree.sourceforge.net/wiki/index.php/Main_Page

- **Instrument control program = SICS**. Developed by PSI and designed using the client/server pattern. Features will be added to this interface to fulfil user requirements.

http://lns00.psi.ch/

OPAL NBI Graphical User Interface

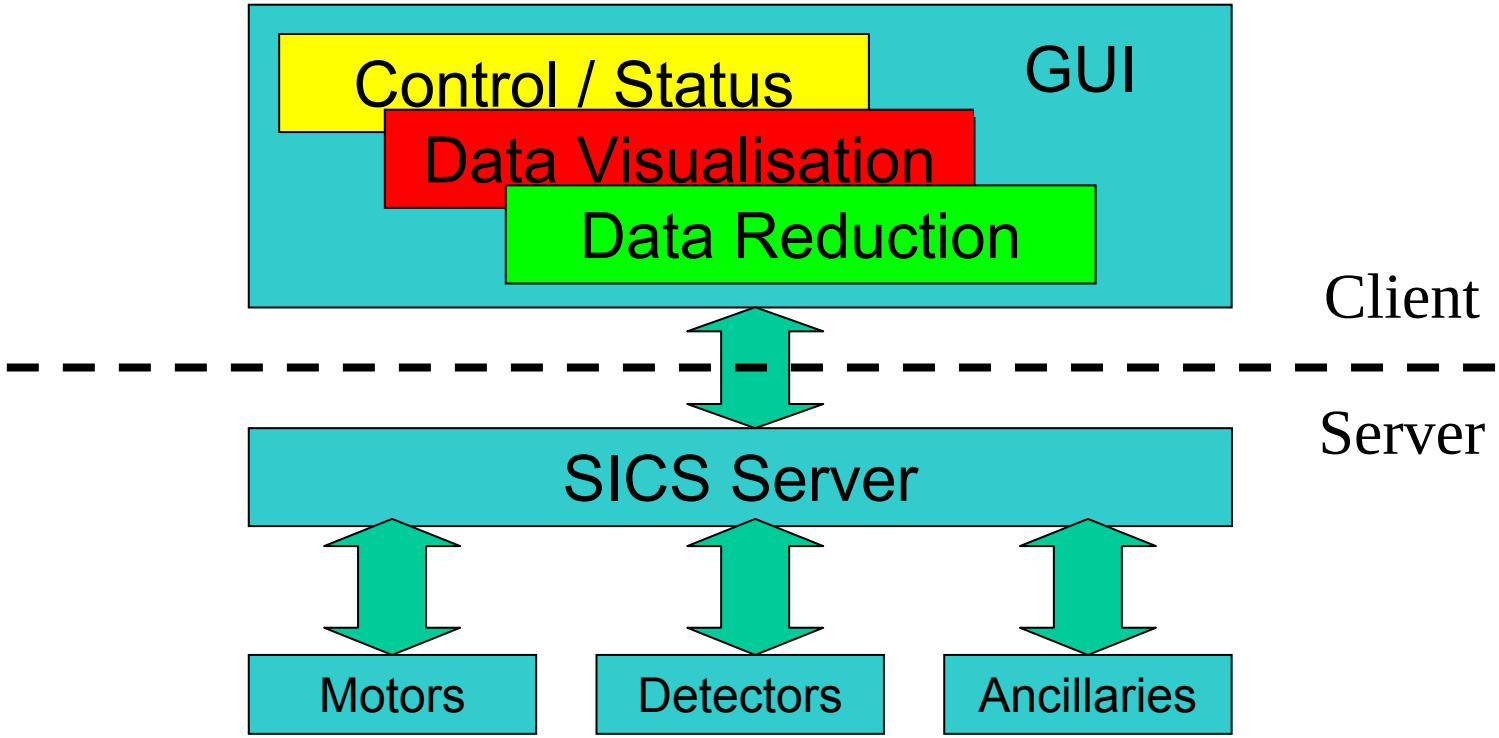

Main Components:

- Instrument Control and Status
  - No prior knowledge of SICS commands
- Live Data Visualisation
  - Preview of the data acquired during experiment
- Data Reduction on acquired data

GumTree Platform

File Edit SANS User Menu Games Window Help

Scan

Device Navigator

- DataNumber
- Environment Monitor
- HistMem
- Macro
- Motor
  - s1
  - tth
- PerfMon
- RS232 Controller
- ScanObject
- SicsRuenStack
- SicsVariable
- SingleCounter

Property	Value
interruptmode	0.0
softupperlim	100.0
precision	0.01
hardlowerlim	0.0
fixed	-1.0
speed	0.02
softlowerlim	0.0
ignorefault	0.0
accesscode	2.0
softzero	0.0

Command Line Terminal — Clear Terminal

Terminal Output

```
--------- Welcome to SICS -----------
You are now connected to a dummy SICS Instrument Control Server

!!!!!!!!!!!!!!!!!!!!!!!!!!!!!!!!!!!!!!!!!!!!!!!!!!!!
WARNING: Proceed with utmost care!
YOU MAY BE MOVING HARDWARE IN THE EXPERIMENT HALL
YOU MAY CAUSE GRIEVIOUS BODILY HARM TO SOMEBODY
YOU MAY DAMAGE VALUABLE AND SOMETIMES IRREPLACABLE HARDWARE
Continuing here seriously compromises hacker's ethics
You will NOT find valuable data here!
The SICS server does NOT allow you to spawn to the system
!!!!!!!!!!!!!!!!!!!!!!!!!!!!!!!!!!!!!!!!!!!!!!!!!!!!

>dir
Command received at Wed Oct 06 10:33:27 EST 2004
evfactory  performance  stack  s1  sics_exitus
dir  tth  transact  Buf  scan
config  fulltransact  run  drive  emon
```

Palette

Command History

Command
dir

Terminal Input

drive motor s1

TwoD Plot View

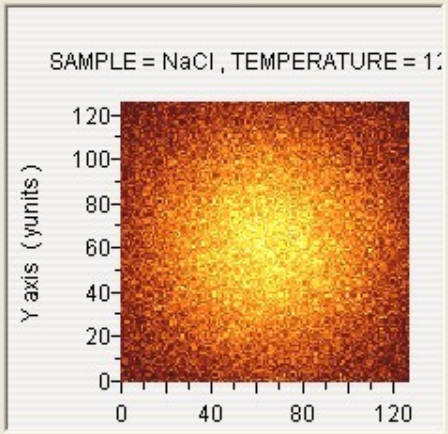

Select Colour Table

Heat 2

MS Word

100%

10

Final Showing Markup Show

GumTree - A Java Based GUI Framework for Beamline Experiments

Tony Lam

Abstract

GumTree is a highly integrated multi-platform GUI for

Draw AutoShapes

Media Player

Playing: 224 K bits/second 01:31

SANS Browser

Back Forward Stop Refresh Go http://www.neutron.anl.gov/nexus/

Nexus

Neutron & X-ray Data Format

Done

SICS scan : point = 3 , x = 0.3 , y = 198.83623

start GumTree Platform 10:52 AM

Instrument Standardization

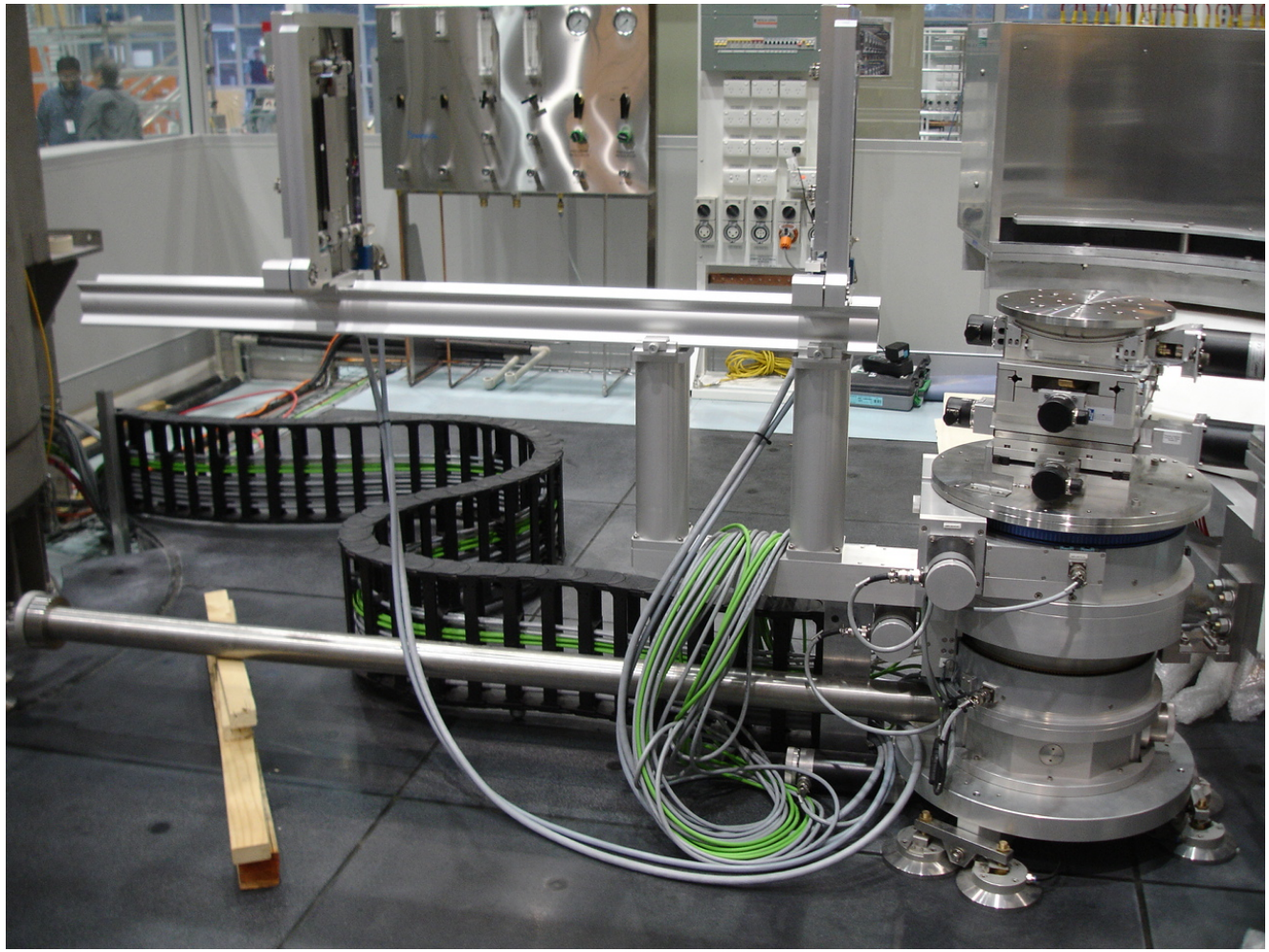

• $2M spent on ensuring consistent modular designs controlled via SICS/Gumtree across all instruments.

Sample Environments Plan

- $0.75M spent on initial ancillaries.
- Sample Environments on current HIFAR reactor will be reused.
- Request for $1.5M for ancillaries over the next year.
- Sample Environments will be listed on-line and bookable by the users.
- SAP used to schedule down-time / maintenance.
- Modular, standardized designs to maximise usage of each ancillary.

The ‘BST’, 20 Ton uniaxial press

Australian Government

ansto

Current Sample Environments

Current Ancillaries	Used On	Quantity	Performance
Cryofurnace-pooled for general use	1,2,3,5,6,7,8	3	6K-800K
Cryofurnace- Reflectometer/SANS	4,9	1	10K-600K
Cryostat	1,2,3,5,6,7,8	1	1.8K-300K
Temperature baths	4,9	3	-50C-250C
SANS 20 pos. sample changer	4	1	-30C-90C
Controlled Gas Furnace	1,2	1	100C-1100C
Vacuum Furnace	1,2,3,4,6,8	1	100C-1800C
BST uniaxial rig	1,2	1	200kN
Vertical Field Cryomagnet / CCR	1,2,3,5,8	1	B= 7.4T T=10K-300K
Horizontal Cryomagnet	4,9	1	5T
Gas Mixer / Controller	1,2,9	1	
Sample Rotating / Stirring Cell	4	1	
Shear Cell / Rheometer	4	1	
Solid-Liquid Cell	9	1	
Langmuir Film Balance	9	1	
Sealed Multiple Troughs	9	1	
Sample Changer-Powders	1,2	1	
SANS 10 pos. sample changer	4	1	20C-300C
•Eulerian Cradles	1,2,3,4,8	2	

Instrument Numbers: **1** – HRPD/Echinda **2**.HIPD/Wombat **3**. Thermal TAS/Taipan **4**. SANS/Quokka **5**. TOFPAS/Pelican **6**. QLD/ Koala **7**. RSD/Kowari **8**. Cold TAS / Sika **9**. Reflectometer / Platypus

Australian Government

ansto

Planned Sample Environment purchases – subject to funding

1	100kN load frame for RSD
2	Load Frame Furnace
3	New Powder Sample Changer
4	Reflect. Sample Changer
5	Paris-Edinburgh cell (high temp.)
6	Real-Time Furnace Vacuum Vessel
7	30MPa SANS pressure cell
8	Humidity Generator
9	Top Loading CCR-pool
10	AC impedance spectroscopy cell
11	Reflectometer gas flow cell
12	Additional -10C-+200C Temperature bath
13	Stopped-Flow Mixing Cell
14	1kN Uniaxial Stress-Polymers
15	^{3}He one-shot refrigerator
16	Polymer Extruder
17	Clamp Pressure Cell
18	Helmholz coils
19	Sample rotating/stirring cell
20	QLD cryogenic sample rotator
21	Reflect. Cryogenic sample rotator

7.4T Closed-Cycle Cryomagnet

- First-off by manufacturer Cryogenic UK www.cryogenic.co.uk
- In operation on HIFAR.
- 7.4T vertical field with the superconducting magnets cooled by a closed cycle refrigeration unit.
- The sample is usually loaded in a Heliplex CCR.

Open Geometry High-T_c Closed Cycle Cryomagnet

- Being built by HTS-110 in New Zealand
  www.hts-110.com
- ±5T Horizontal Field.
- ΔB up to 0.25T/min.
- Patented BiSrCaCuO high-temperature superconductor.
- Uniformity of < 1.5% over 50mm^3 sample.
- ± 15.5 degrees axial beam.
- Another manufacturer first off!

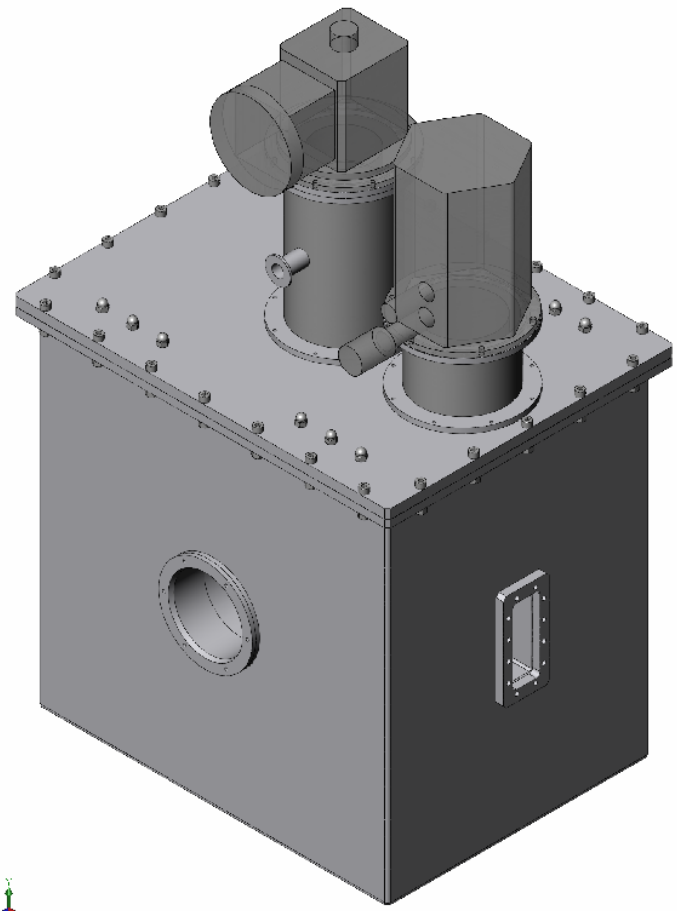

SANS 10 & 20 position sample changers

- 20 position changer operates from -30C to +90C with silicone oil.
- Infrared imaging used on prototype to test temperature uniformity and heating rate.

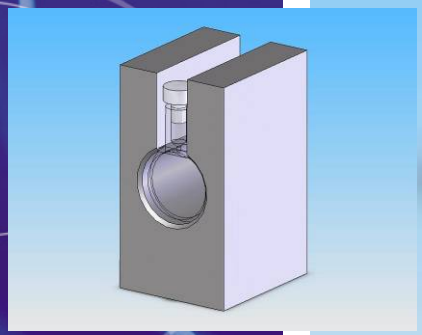

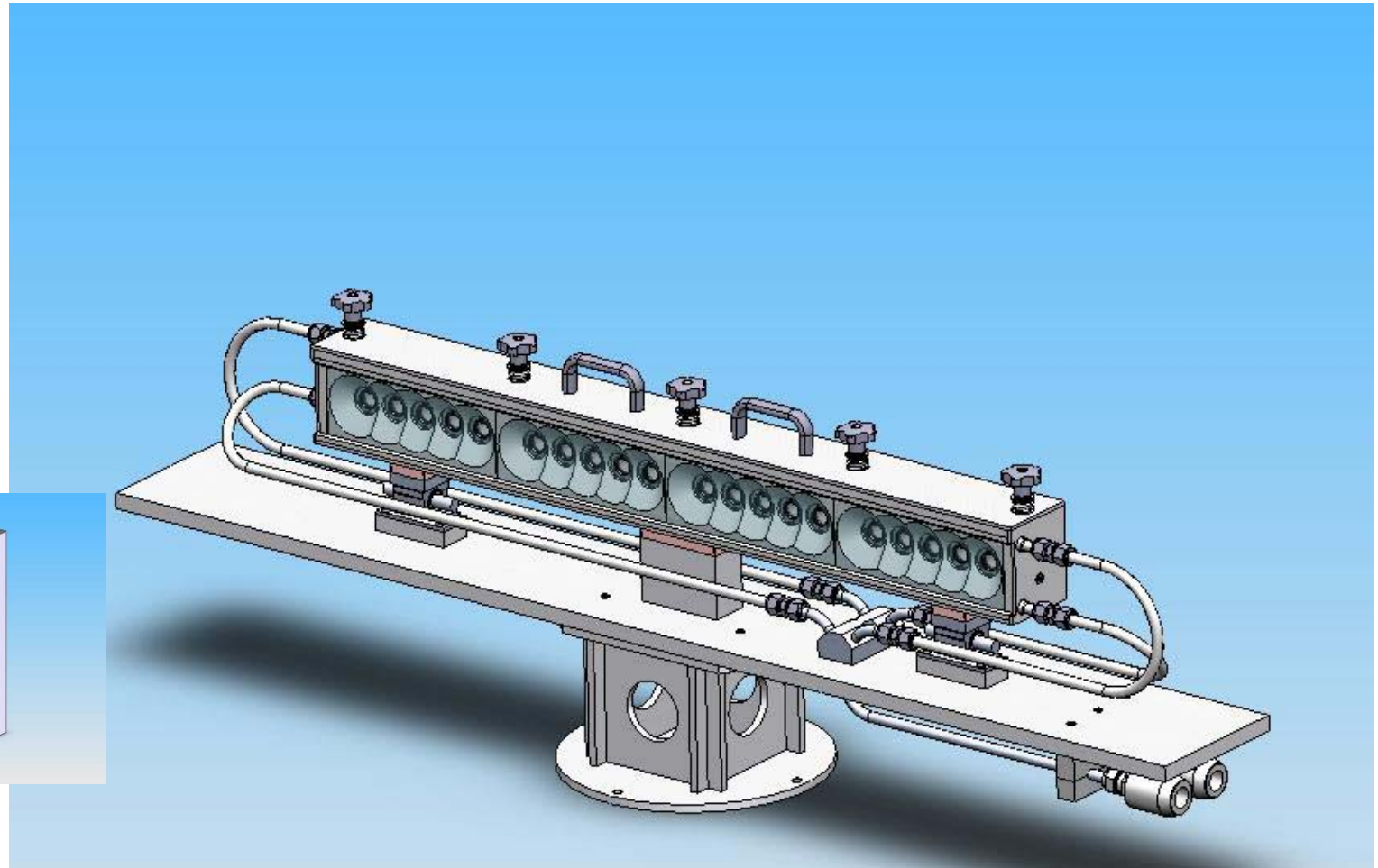

Fast quench heating/cooling sample environment for SANS (S.Pullen UWS)

- Temperature range 120K to 300C.
- The neutron beam is centered on either the hot or cold cell.
- ΔT up to 40C/sec (dependent on thermal mass of sample). Lines and cells are preheated and pre-cooled to enhance this.
- Cooling via helical stainless steel tube immersed in LN_2 through which nitrogen gas flows; Heating via resistive wire strip.

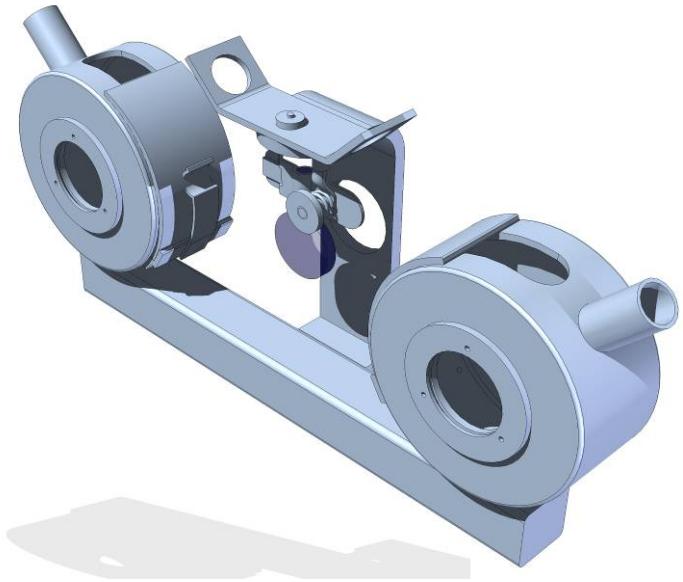

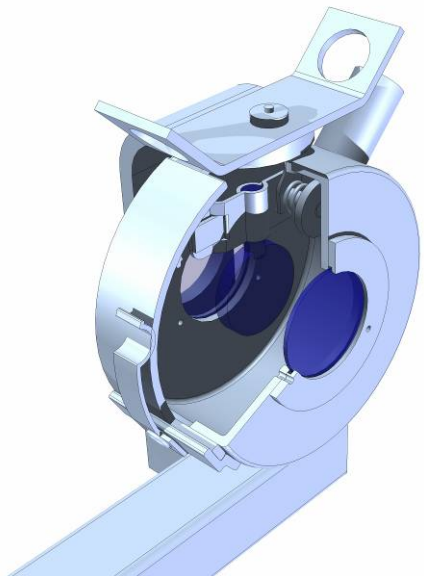

Time Resolved Neutron Diffraction under a Stroboscopic Electric Field J Daniels (Monash Uni).

- Neutron detections time-stamped to within 12.5nsec, but due to Time-of-flight issues resolution is only +/-15usec.
- Timing information sent to the PC from the pulse generator driving a 10kHz square wave into the 10kV power supply.

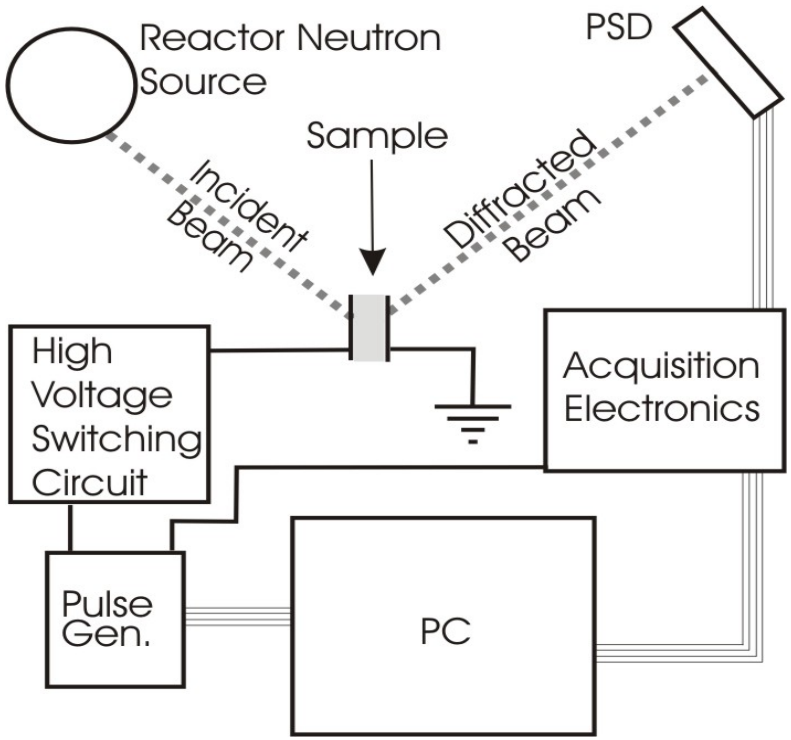

• A simple environmental chamber was built to control sample temperatures around key phase transition points.

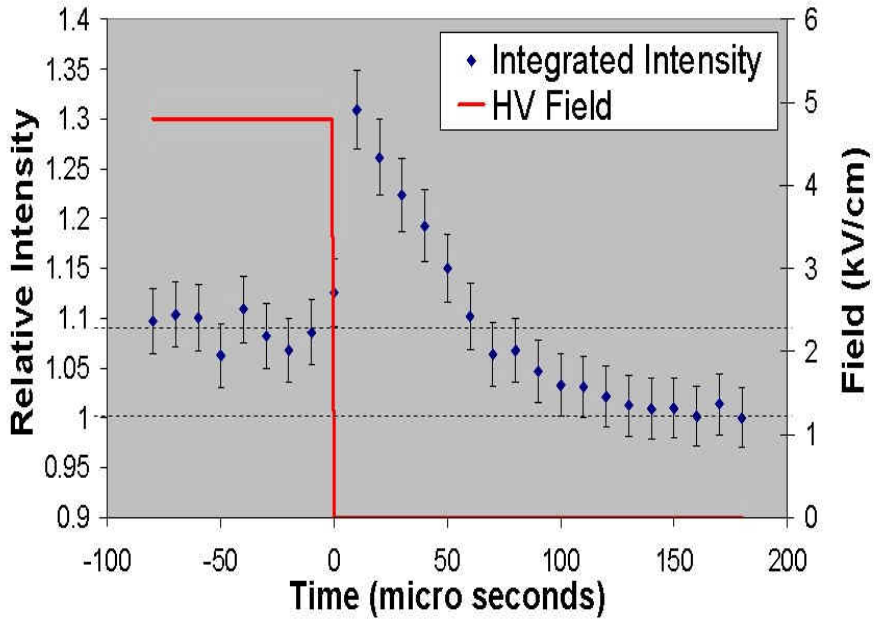

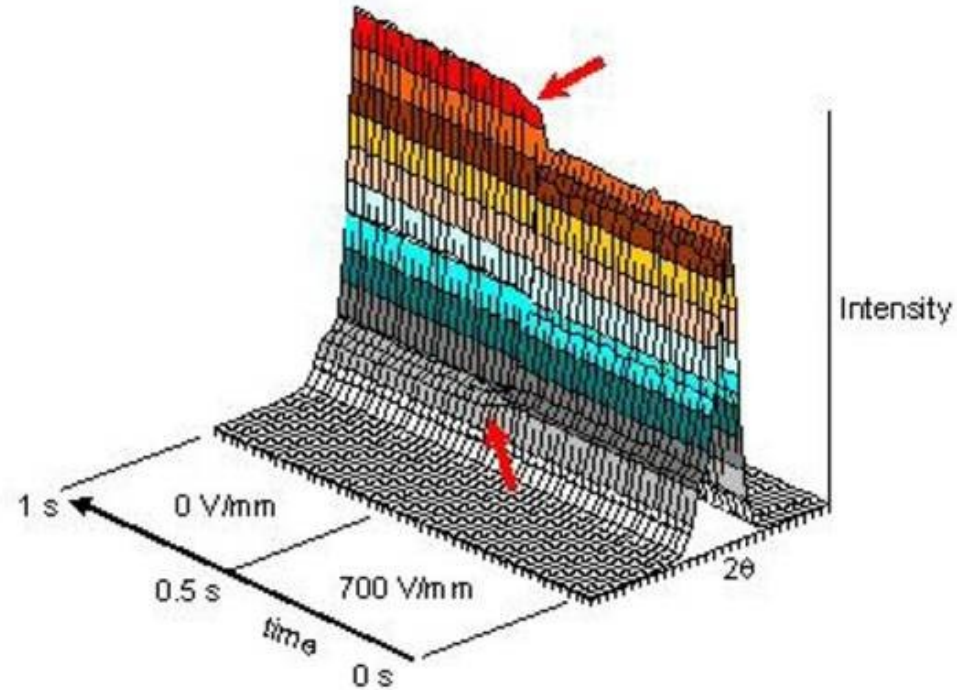

Time Resolved Neutron Diffraction Studies of Triglycine Sulphate near the Ferroelectric Transition during the Application of High Voltage Electric Fields

J.E. Daniels [1], T.R. Finlayson [1], A.J. Studer [2], M.E. Hagen [2]

[1] School of Physics, Monash University, Clayton, Victoria 3800, Australia

[2] Bragg Institute, ANSTO, Lucas Heights, NSW 2234, Australia

Australian Government

ansto

Summary

- Commissioning tests on the instruments begin next month, starting with ECHIDNA High-Resolution Powder Diffractometer. They will continue over the next 6-8 months.

- Waiting on approval for a $1.5M budget for additional purchases.

- Sufficient sample environments for commissioning stage.

- Modifications of equipment from HIFAR will take some time.

- Neutron scattering on HIFAR reactor to end of 2006.

Australian Government

ansto

Acknowledgements

- SANS fast quench heating / cooling – Stewart Pullen University of Western Sydney * (Honours thesis, Dr Ken Dollan supervisor) 13329583@student.uws.edu.au

- Stroboscopic Electric Fields - John Daniels – Monash University. John.daniels@sci.monash.edu.au

- ANSTO / Bragg Institute - Jamie Schulz, Rob Robinson, Ross Piltz, Gene Davidson, Merv Perry, Peter Baxter, Jason Christoforidis, Elliot Gilbert, Andrew Studer, Shane Kennedy, Lauren Mackaway, Robert Knott, Margaret Elcombe, Michael Prior, Mark New, Tony Lam, Dave Penny, Tracey Hanley.

  Email firstname.lastname@ansto.gov.au

Australian Government

ansto

Guide Hall view from North-East

Australian Government

ansto

Guide Hall view from South-West